V132 VALVE
OPERATING MANUAL

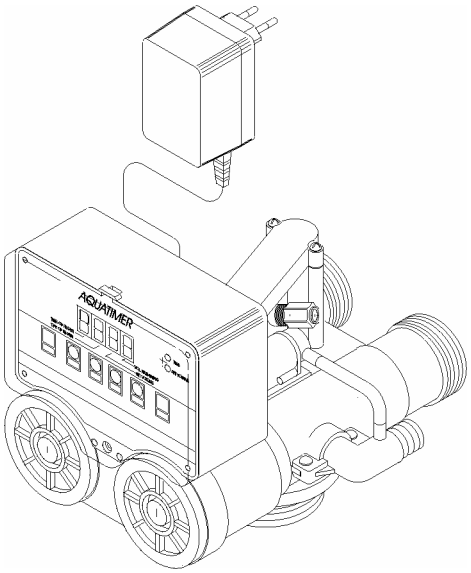

Document	Revision	Revision Notes	Date
MAN0020	A		

Index

- General Features – Technical Specification 4
- Dimension 5
- Softening Function Schemes 6
- Softening Version Schemes 7-8
- Demineralisation Version Schemes 9
- Variation of Use = Controller/Pilot Valves Connections 10
- Injectors& Flow Controls 13
- Components of Standard Base Valve 14
- Standard Volume Version & Filtration Version 15
- Duplex and Demineralisation Valve Version 16
- Table for Controllers Selection 17
- Automatic Remote By-pass for Softners &for Filter 18
- Automatic Remote By-pass Components 19
- Automatic By-pass Function 20
- Chlorine producer Components 21
- Tips and Suggestions 22
- Spare Parts Kit 23
- Accessoiries and Spare Parts 24
- Intervention of ordinary maintenance 25

GENERAL FEATURES

"V132" valves are the essential elements in building the following systems:

a) simplex, duplex or multi-tank softening (decalcification) systems for domestic, laboratory and industrial use;
b) simplex or duplex demineralisation and dealkalisation systems for laboratory and industrial use and all other uses requiring water with characteristics of guaranteed quality;
c) simplex or duplex filtering systems for all of the previous applications.

The valves are made with materials that guarantee utmost resistance and quality. They are available with a vast range of controllers for every operation phase of service and regeneration, starting from the simplest electronic basic controller with weekly clock to the sophisticated electronic controllers in various models which enable volume, volume-time control and salinity control in MicroSiemens/cm, etc.
In the electronic systems, all the intervention times of operation phases can be programmed in relation to system type and dimension.
For specific controller features, see the relative manual.

TECHNICAL SPECIFICATIONS

Operating Pressure	: da 1.5 a 6 bar
Maximum water flow with load of 1 bar	: 7 mc/h
See table 1 for value variables	: -
Backwash water flow	: max 3 mc/h
Slow rinse water flow	: da 46 a 350 lt./h
Fast rinse water flow (down-flow)	: max 2,5 mc/h
Static resistance to pressure	: 22 bar
Maximun quantity of regenerative resin	: 200 lt.
Operating temperature	: da 5 a 40° c
Materials of main components	: abs + fv
Tank connection	: 2”1/2 8 filetti / “
Input output connections In-out Port connections	: 2” gas : See page 24

Table 1 Pressure Drop

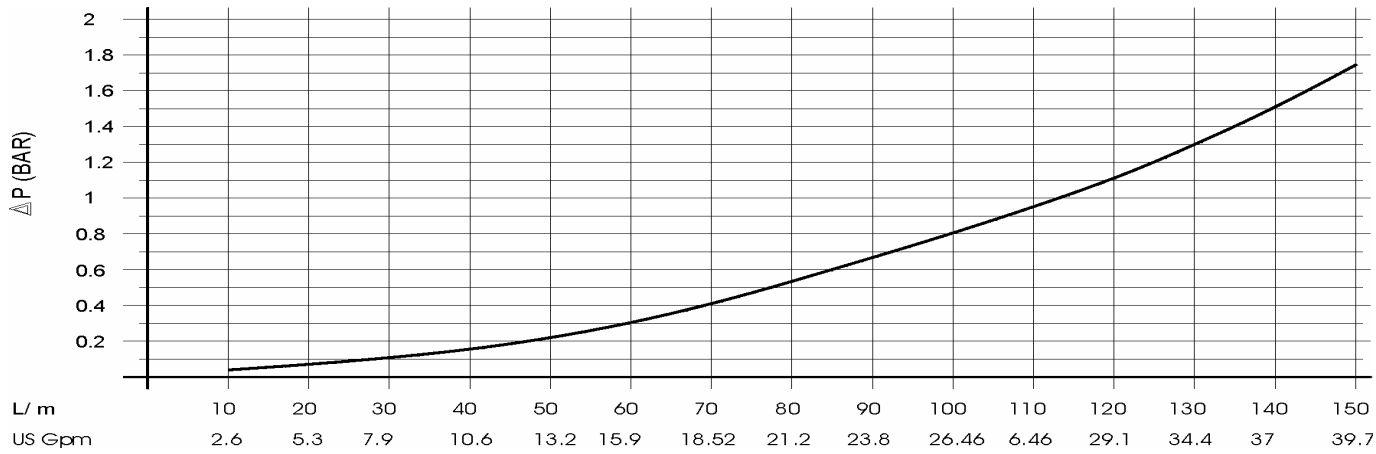

DIMENSIONS

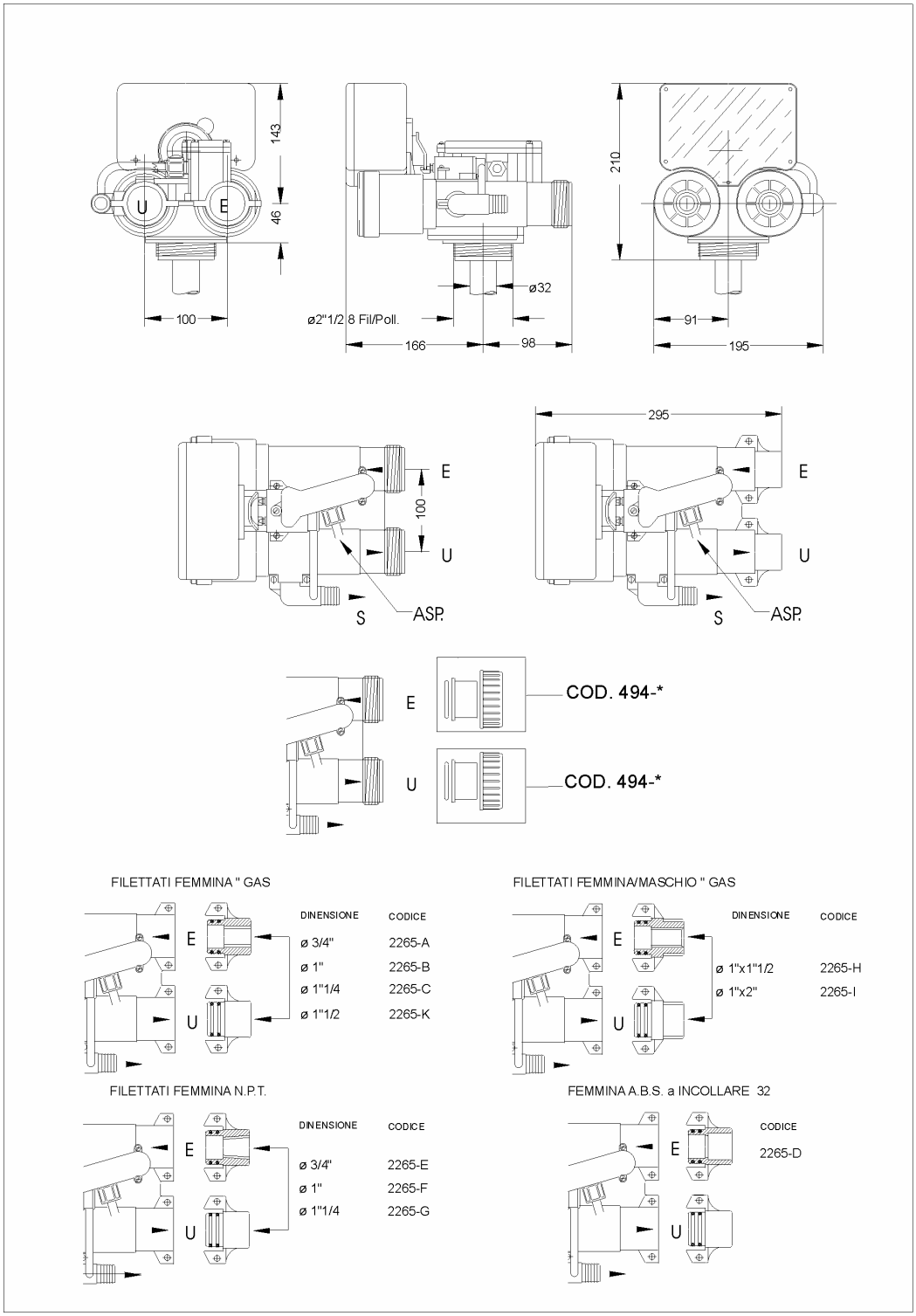

For cod. 494-* see page 24

FUNCTION SCHEMES
SOFTENING

Service
Servizio

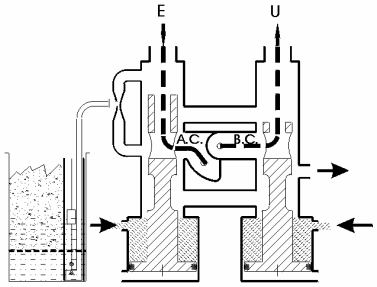

Backwash
Controcorrente

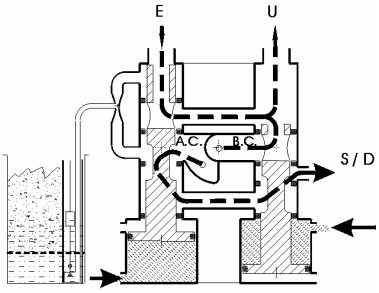

Brine draw
Aspirazione

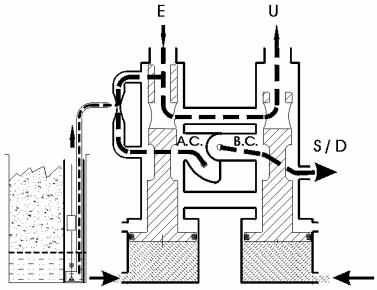

Slow rinse
Lavaggio lento

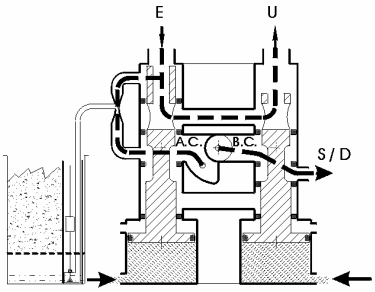

Fast rinse
Lavaggio veloce

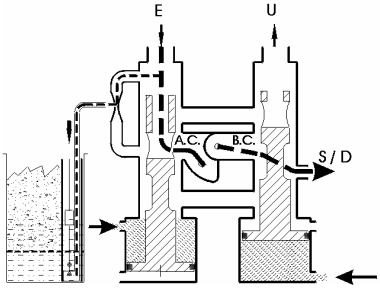

SOFTENING VERSIONS SCHEMES

A) Duplex softening scheme with two brine measure valves, slow rinse,3V output valve. 5 pilot valve controller.

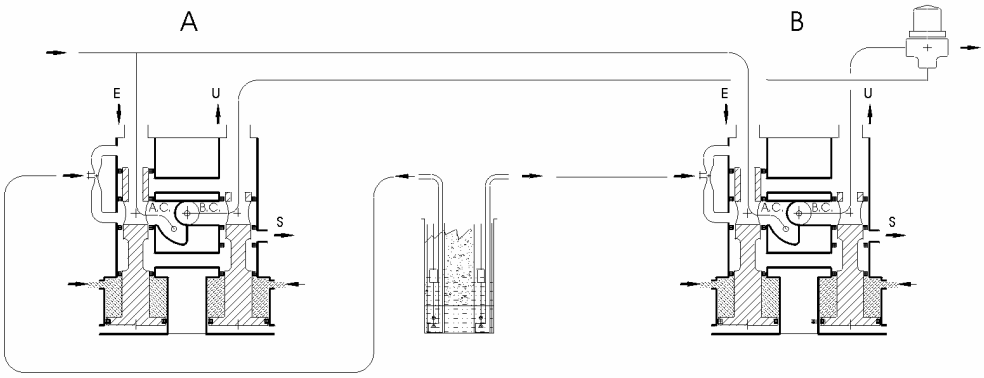

B) Duplex softening scheme with brine measure valve, slow rinse and automatic/dynamic device to determine brine-draw line. 5 pilot valve controller. 3V valve.

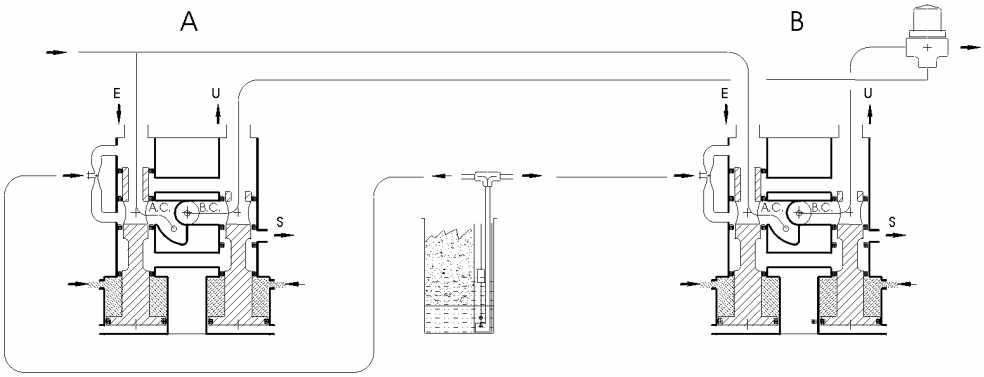

C) Duplex softening scheme without slow rinse, (salt-brine container fed separately), without brine-measure valve. 5 pilot valve controller. 3V valve.

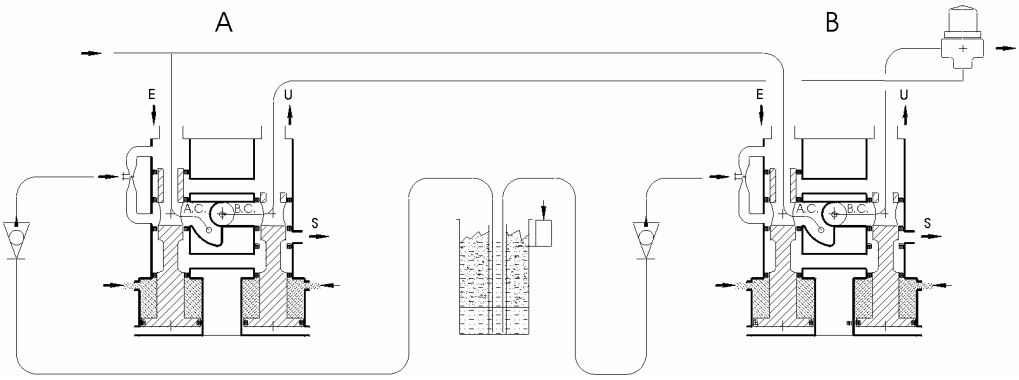

SOFTENING VERSIONS SCHEMES

E) Duplex softening scheme with slow rinse (Salt/brine container fed separately) without brine-measure valve. 7 pilot valve controller. 3V valve.

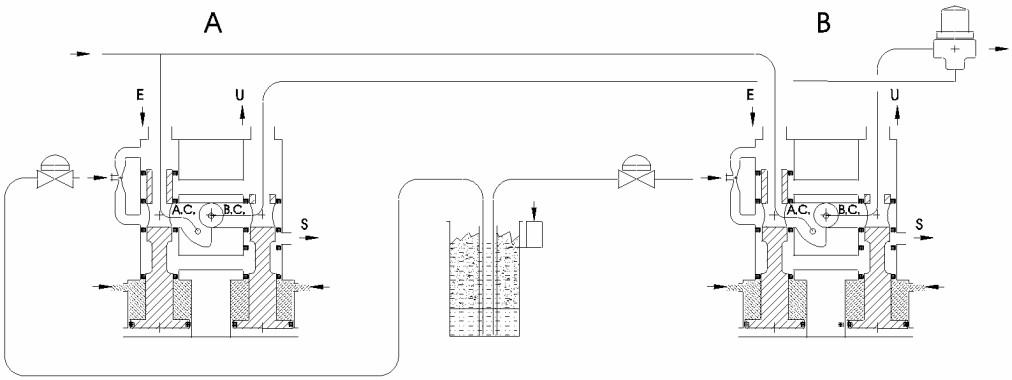

F) Duplex softening scheme without slow rinse (Salt/brine container fed separately) Two output valves "A" and "B". 5 pilot valve controller. Without brine measure valve.

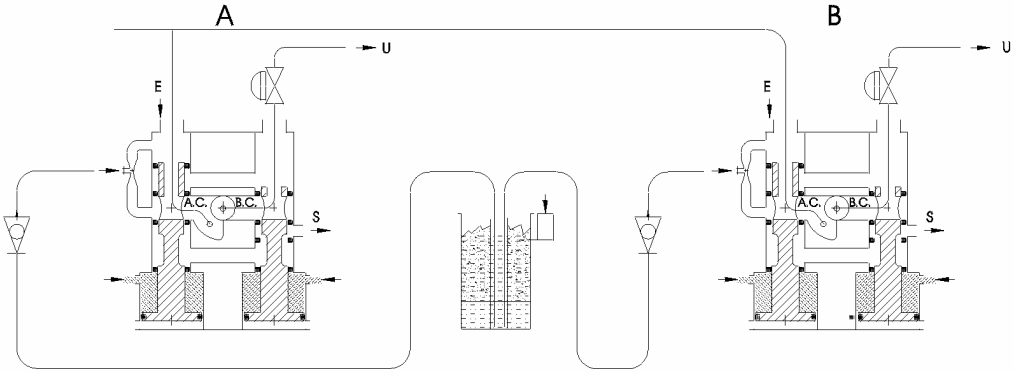

G) Duplex softening scheme with slow rinse (Salt/brine container fed separately) Two output valves "A" and "B". 7 pilot valve controller. Without brine measure valve.

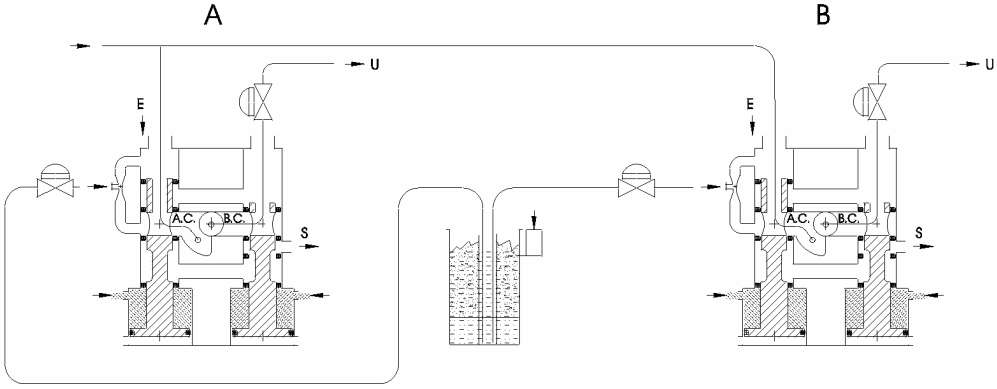

DEMINERALISATION VERSIONS SCHEMES

H) Demineralisation scheme without valves for slow rinse, 5 pilot valve controller.Attention! Dissuaded application

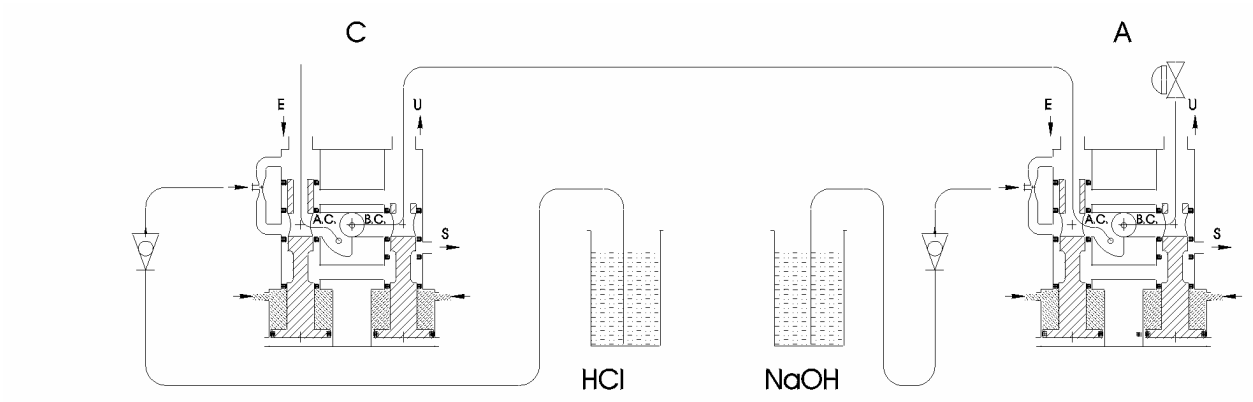

I) Demineralisation scheme with valves for slow rinse, 7 pilot valve controller.Attention! Application Recommended

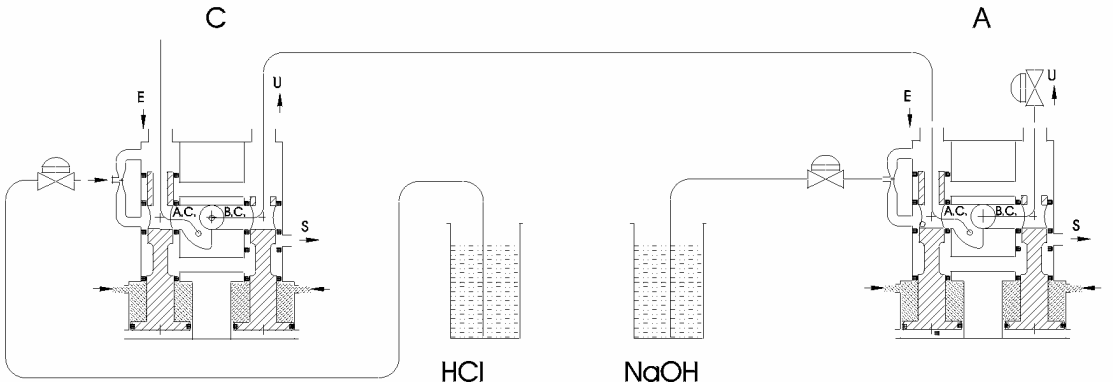

VARIATION OF USE

Duplex softening connections referring to schemes “A”, “B”, “C” .

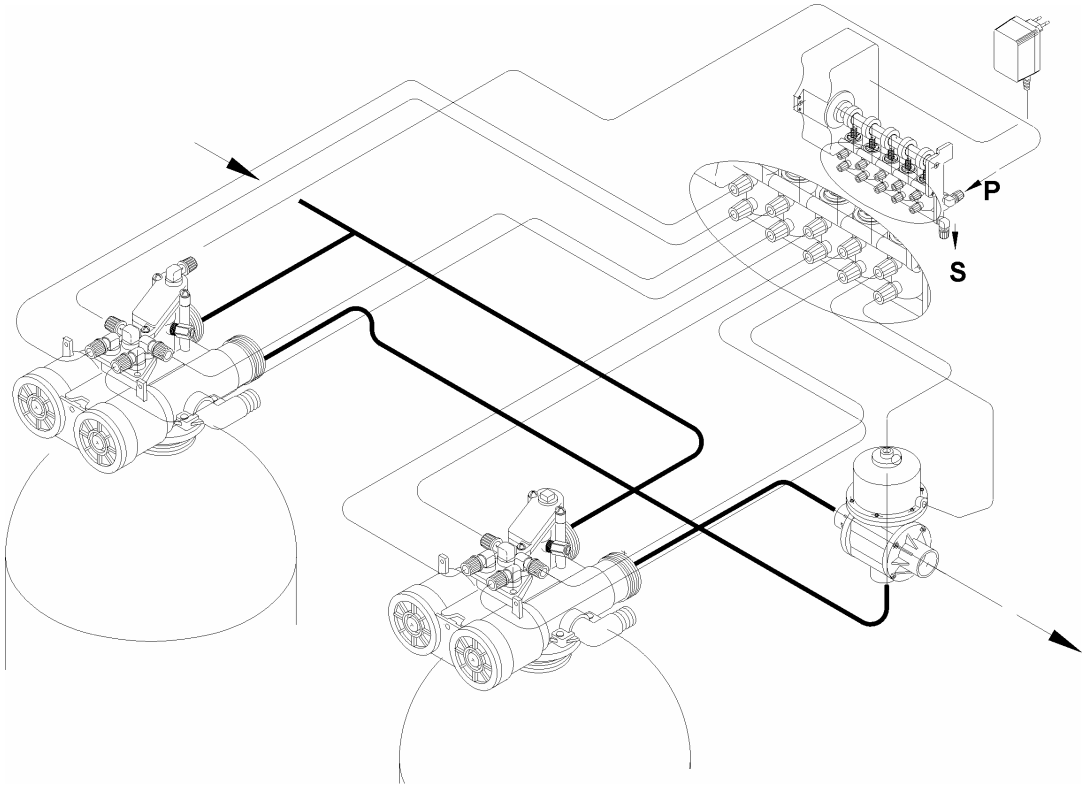

Duplex softening connections referring to schemes “F”.

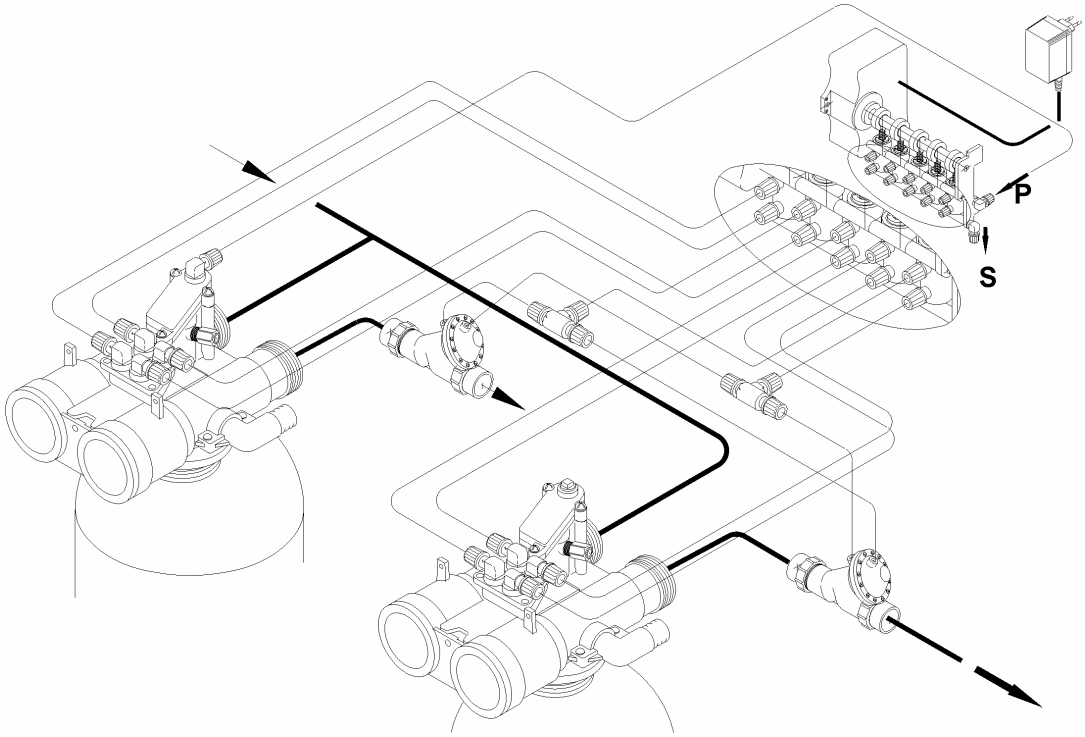

Duplex softening connections referring to schemes “E”.

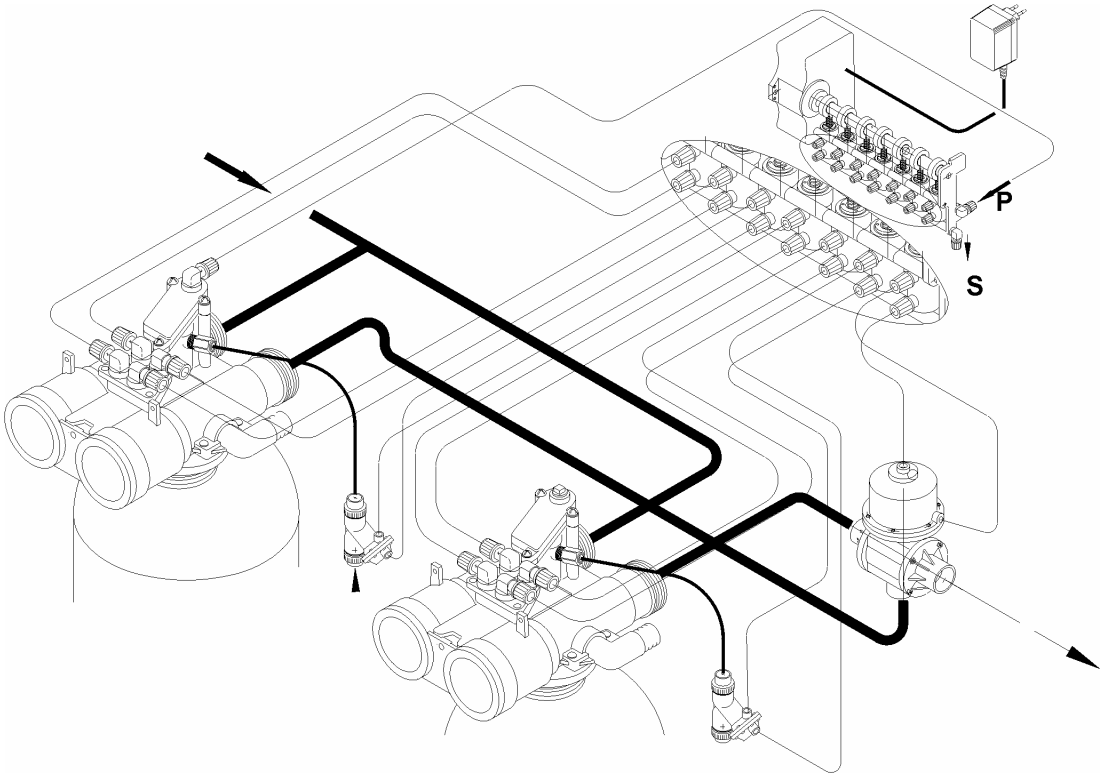

Duplex softening connections referring to schemes “G”.

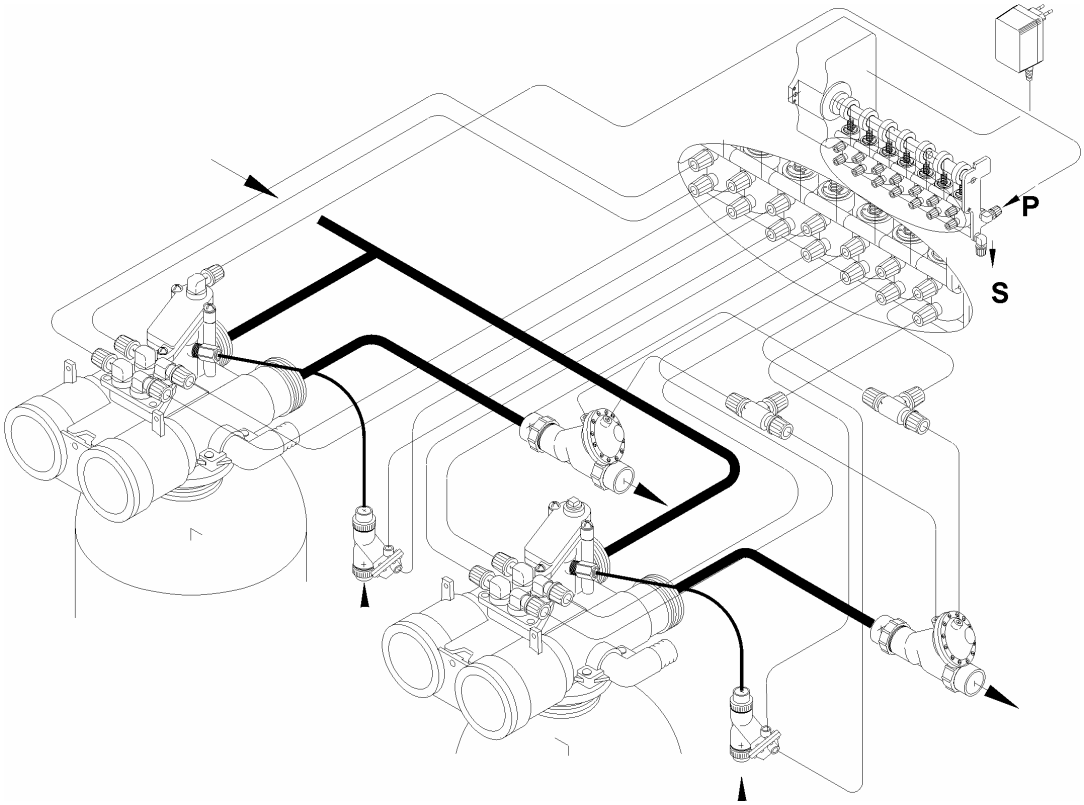

Deionisation connections referring to schemes “H”.

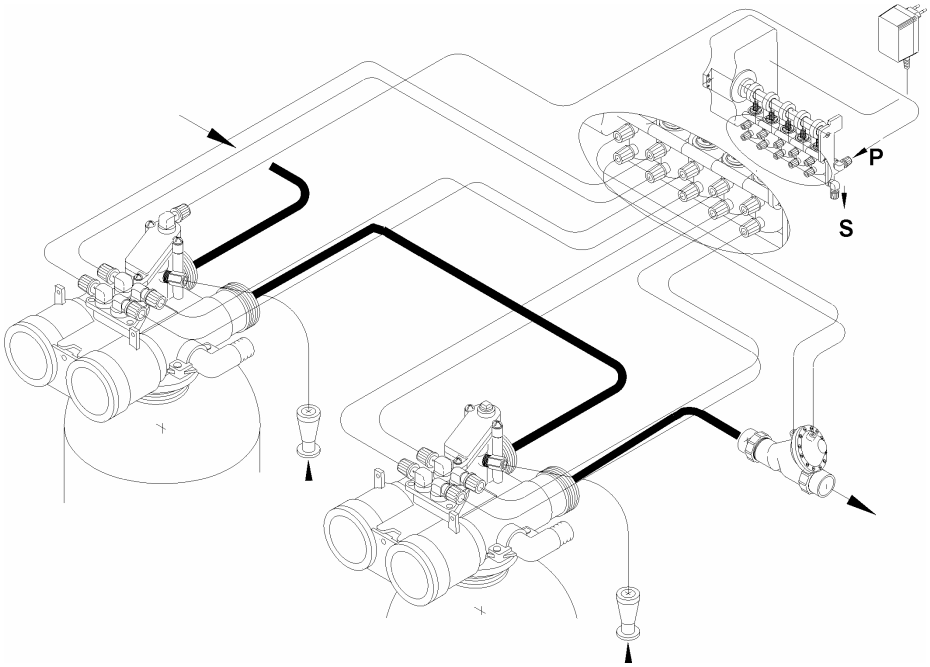

Deionization connections referring to schemes “I” .

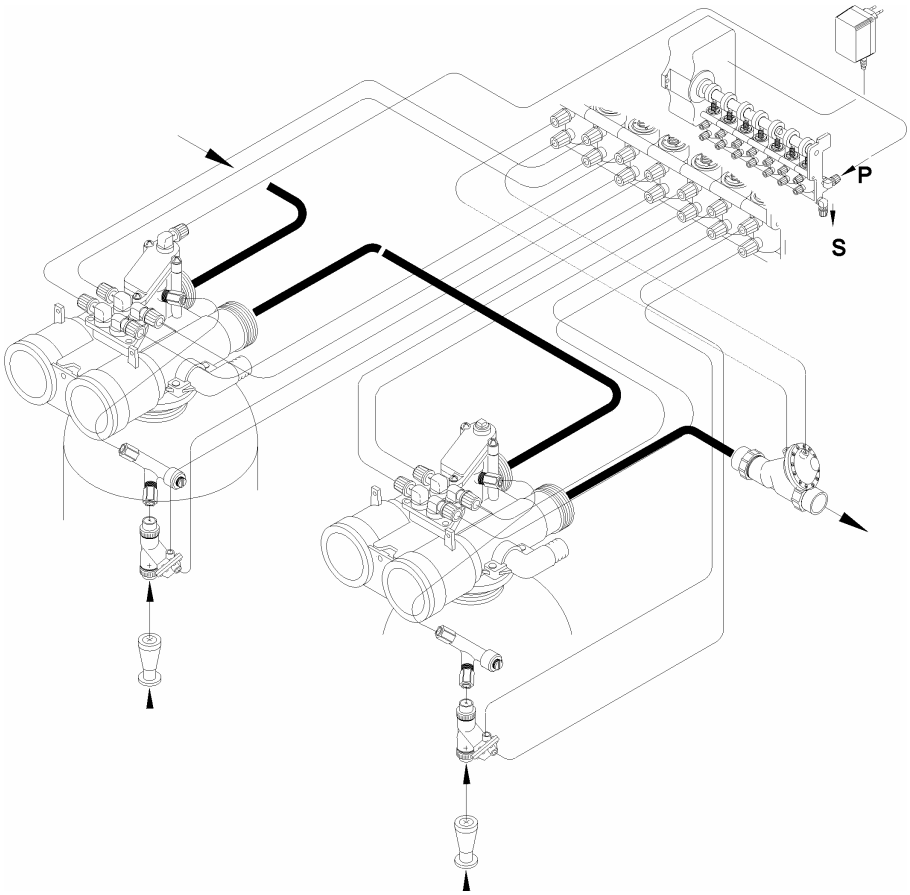

IINJECTOR AND FLOW CONTROLS

PRESSIONE PRESSURE		BAR PSI	2 29	2.5 37	3 44	3.5 51	4 59	4.5 66	5 73	5.5 81
EIETTORE MARRONE BROWN INJECTOR	ASPIRATO BRINE DELIVERY	L/h Gpm US	27 0.12	30 0.13	33 0.14	39 0.17	43 0.19	44 0.19	45 0.2	
	MOTRICE MOTIVE/SLOW RINSE DELIVERY	L/h Gpm US	59 0.26	66 0.29	72 0.32	78 0.34	83 0.37	88 0.39	93 0.41	
	PORTATA TOTALE REGENERATION DELIVERY	L/h Gpm US	88 0.39	96 0.42	105 0.46	117 0.52	126 0.55	132 0.58	138 0.61	
EIETTORE BLU BLUE INJECTOR	ASPIRATO BRINE DELIVERY	L/h Gpm US	51 0.22	60 0.26	66 0.29	78 0.34	84 0.37	87 0.38	90 0.4	
	MOTRICE MOTIVE/SLOW RINSE DELIVERY	L/h Gpm US	73 0.32	81 0.36	89 0.39	96 0.42	103 0.45	109 0.48	115 0.51	
	PORTATA TOTALE REGENERATION DELIVERY	L/h Gpm US	124 0.55	141 0.62	155 0.68	174 0.77	187 0.82	196 0.86	205 0.9	
EIETTORE ROSSO RED INJECTOR	ASPIRATO BRINE DELIVERY	L/h Gpm US	111 0.49	133 0.59	149 0.66	173 0.76	180 0.79	183 0.81	186 0.82	189 0.83
	MOTRICE MOTIVE/SLOW RINSE DELIVERY	L/h Gpm US	159 0.7	177 0.78	194 0.85	210 0.92	224 0.99	238 1.05	251 1.11	263 1.16
	PORTATA TOTALE REGENERATION DELIVERY	L/h Gpm US	270 1.19	310 1.36	343 1.51	383 1.69	404 1.78	421 1.85	437 1.92	452 1.99
EIETTORE NERO BLACK INJECTOR	ASPIRATO BRINE DELIVERY	L/h Gpm US	188 0.83	210 0.92	228 1.0	270 1.19	282 1.24	291 1.28	300 1.32	307 1.35
	MOTRICE MOTIVE/SLOW RINSE DELIVERY	L/h Gpm US	249 1.1	279 1.23	305 1.34	330 1.45	353 1.55	374 1.65	394 1.73	414 1.82
	PORTATA TOTALE REGENERATION DELIVERY	L/h Gpm US	435 1.92	489 2.15	533 2.35	600 2.64	635 2.80	665 2.93	694 3.06	721 3.17

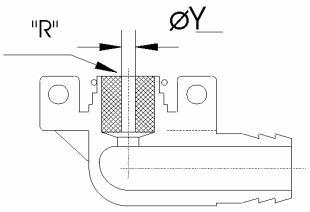

FLOW CONTROL			FLOW TO DRAIN		INJECTOR	
CODE	"R" mm	Y	Litri/ora	G.p.m. US	COLOR	CODE
070/1	3		320	1.41	BROWN	60-M
070/2	3.5		480	2.11	BLUE	60-B
070/3	4		700	3.08	BLUE or RED	
070/4	5		950	4.18	RED	60-R
070/5	6		1450	6.38	RED or BLACK	
					BLACK	60-N

COMPONENTS OF STANDARD BASIC VALVE

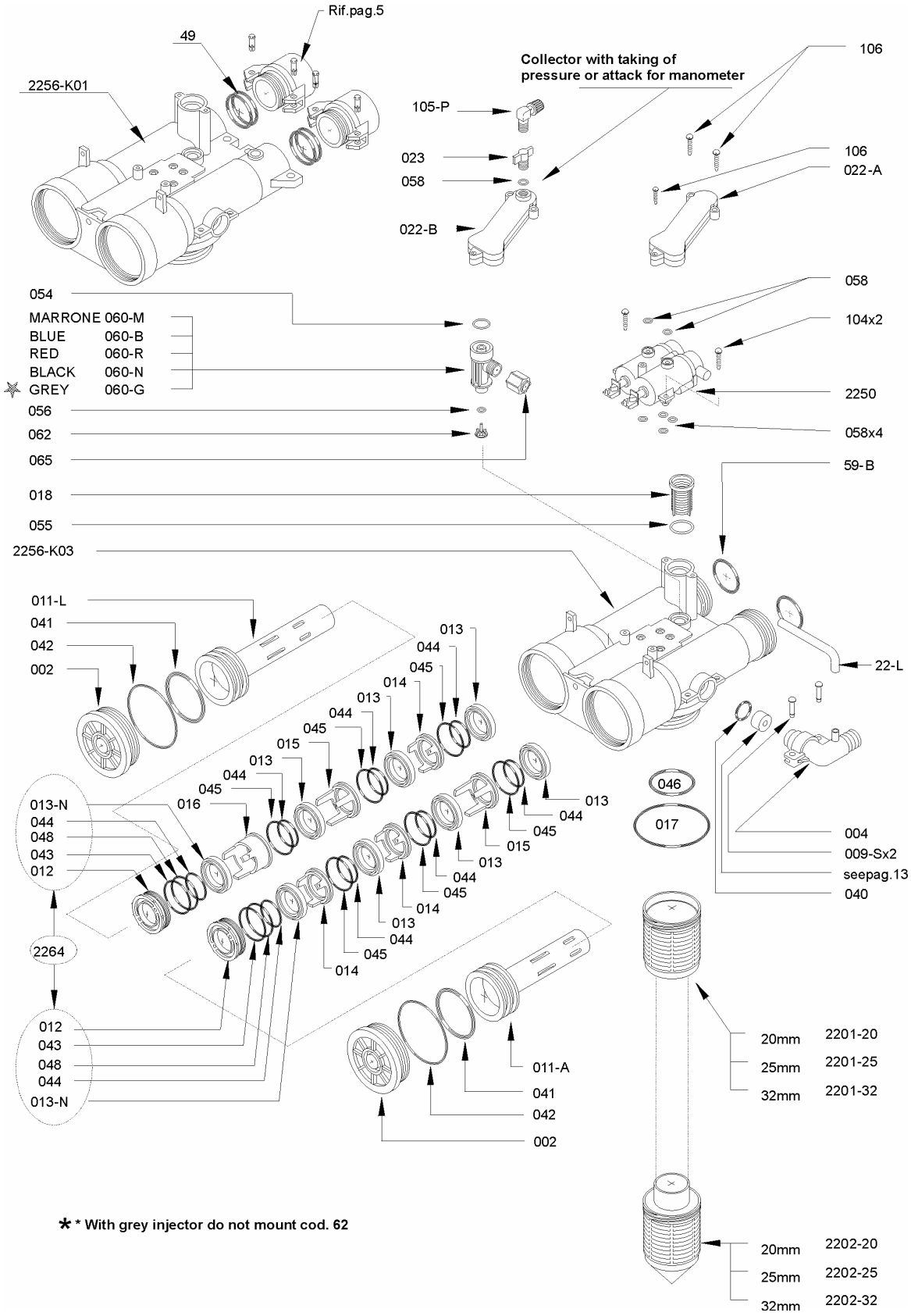

* * With grey injector do not mount cod. 62

STANDARD VOLUME VERSION

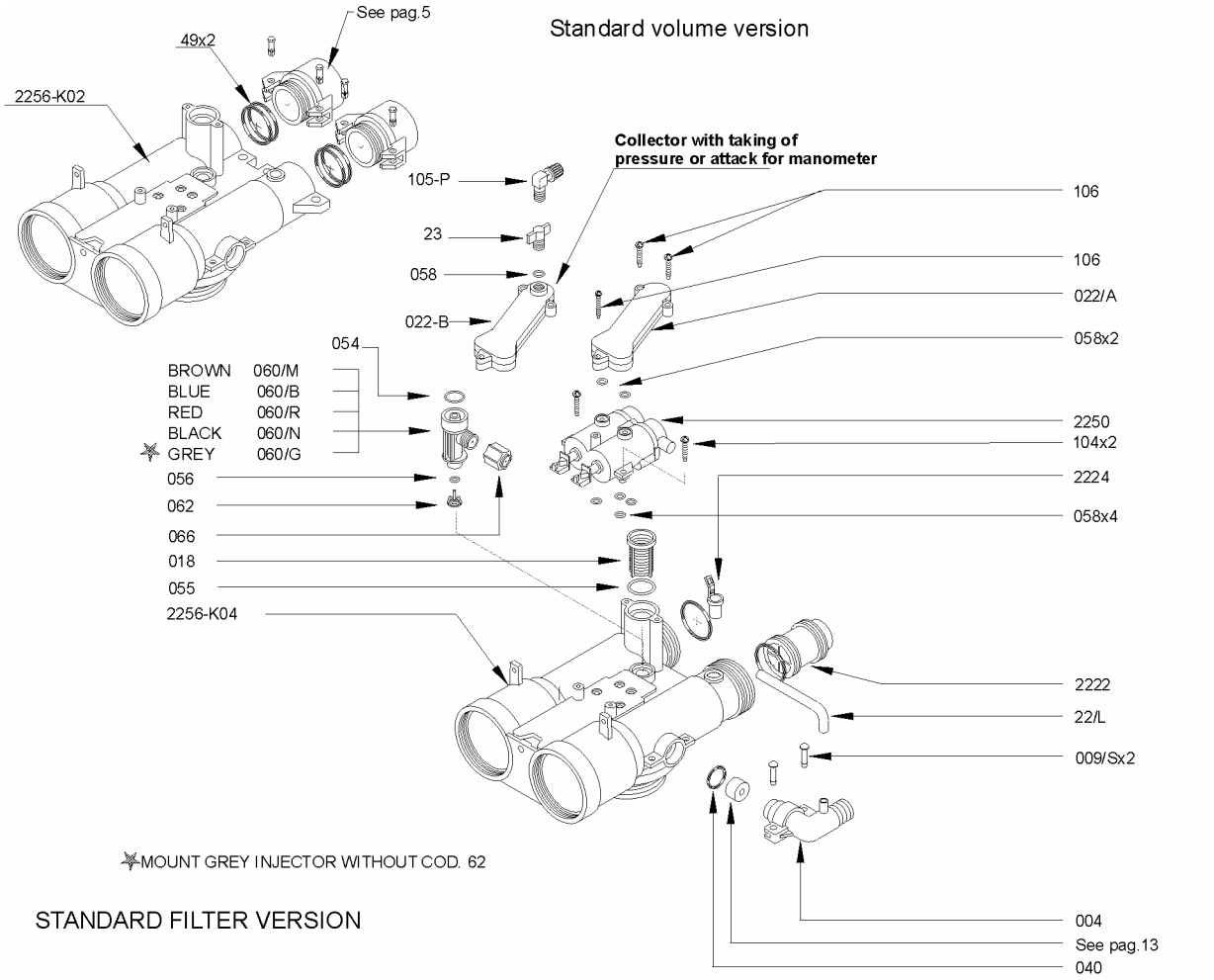

STANDARD FILTER VERSION

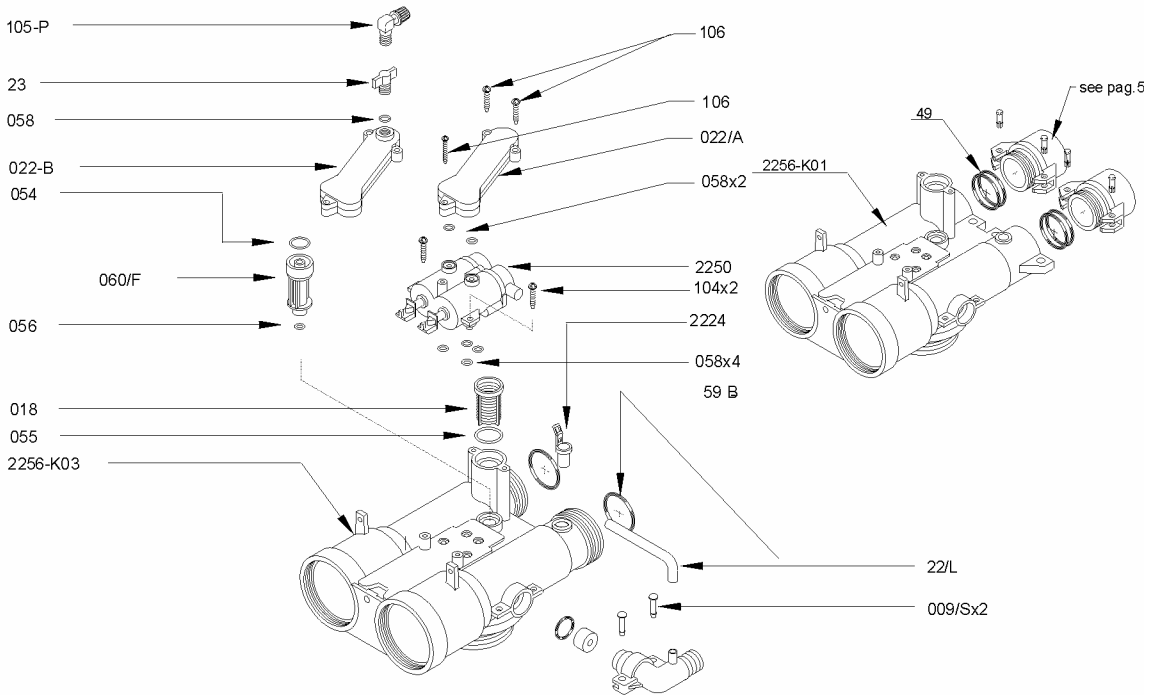

VARIATION DUPLEX AND DEMINERALISATION VALVES

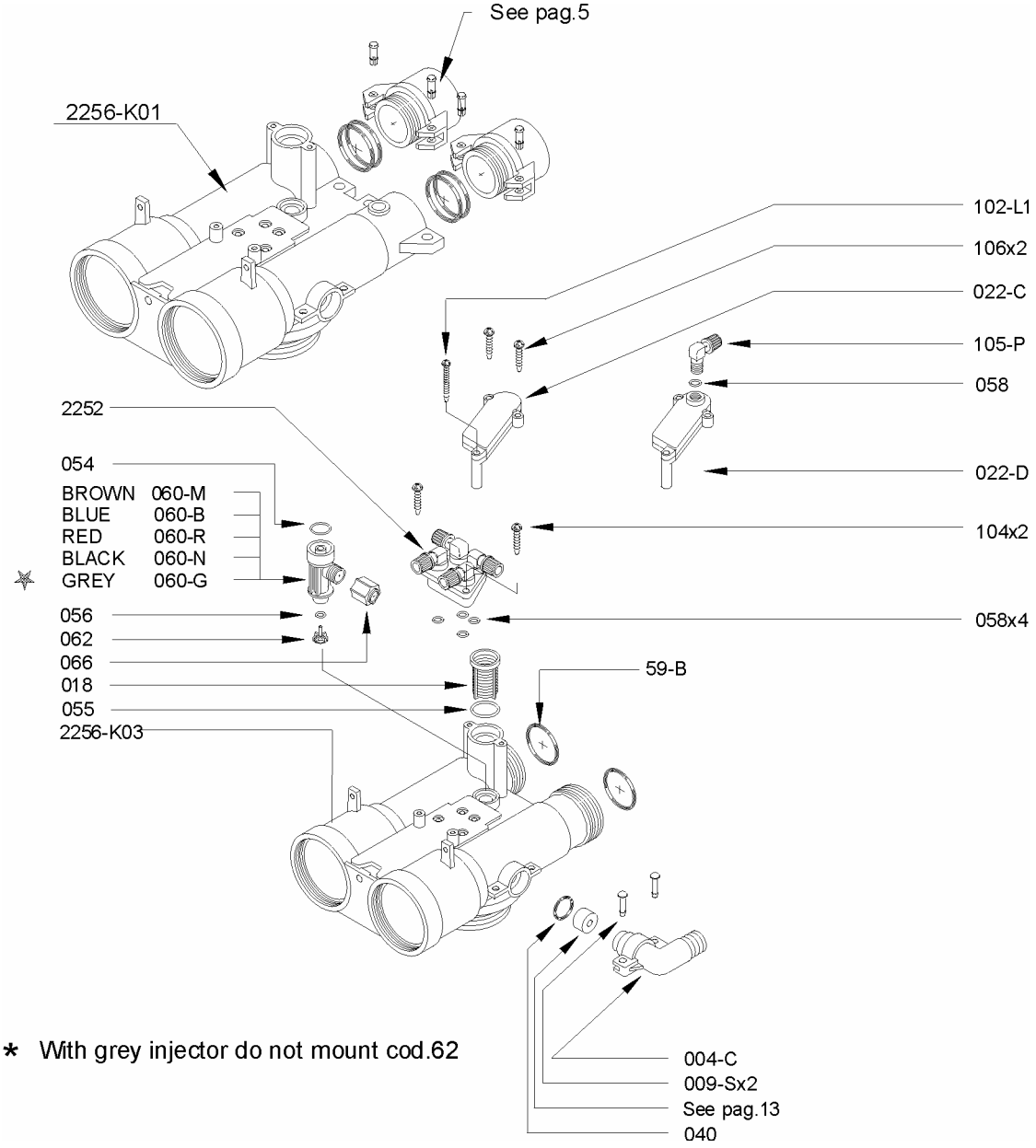

* With grey injector do not mount cod.62

CONTROLLER

This table shows a vast range of controllers to use in combination with the various versions of the V132 valve: from the most elementary electronical versions to a range that enables the most evolved combinations of controller/valves in making the lastest generation systems in water treatment.

	Timer Code	Applications			Valve type					Function Versions						
		Softening	Filtration	Demineralisation	V132A	V132T	V132F	V132E	V132D	Time control	Volume control	Time / Volume control	Din connector	Clorine producer	Economy probe	Cable to watermeter
CONTROLLER STANDARD ELECTRONIC Electronic standard timer wich regenerates at the set hour in the allowed days the regeneration cycles are dependet upon a set rigeneration cycle scheme	CS0	○	○		○		○			○						
STANDARD PULSI Electromechanical controller with manual regeneration start, with the possibility of remote start function.	SPO	○			○								1			
	SPO/08		○				○						1			
XP CONTROLLER Electronic controller with adjustable regeneration cycle state times, time or time-volume regeneration start with delayed intervention. Manual start too	XPO	○	○		○		○			○						
	XPO/01	○				○				○		○				○
AQUA CLOR Electronic controller with adjustable regeneration times, volume regeneration or volume regeneration with delayed start. EEPROM device. Chlorine producer TIMER	ACLO	○			○					○				○		
	ACLO/01	○				○				○	○	○		○		○
AQUA TIMER Electronic controller with adjustable regeneration cycle stage times. Time, volume, volume regeneration with delayed start. Remote ellettronic signal available on request.	ATO	○	○		○		○			○						
	ATO/01	○				○				○	○	○				○
	ATO/02	○			○	○				○	○	○				
AQUA PROGRAM Electronic controller with adjustable regeneration cycle stage times: time, volume or volume regeneration start with remote start function. Optimises and controls regeneration cycle, command for another device available on request. Remote starter. INHIBIT. EEPROM device. (SIATA patent).	APO/02	○			○	○				○	○	○	2		○	
AQUA CUBIC Electronic controller with adjustable regeneration times. Till 8 steps full regable. Usualy use for duplex plant. Volume regeneration start. EEPROM device.	AC5	○	○					○			○		1			
	AC7	○	○					○			○		1			
AQUA IONIC Electronic controller. Specific for demineralization systems. Adjustable regeneration cycle stage times. Treated water quality control in micro siemens/cm. Regeneration start: Volume - Conductivity - Volume/conductivity Manual both too. Interface available for auxiliary services.	AI5			○					○		○		3		○	
	AI7			○					○		○		3		○	

AUTOMATIC BY-PASS FOR DECALCIFIERS

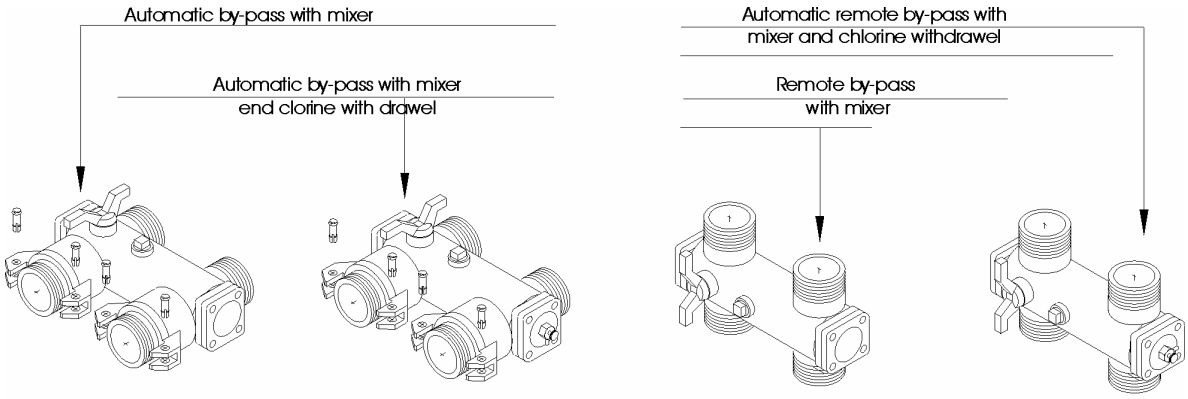

Code BV-D Code BV-DP Code BV-R Code BV-RP

FUNCTIONAL SCHEMES

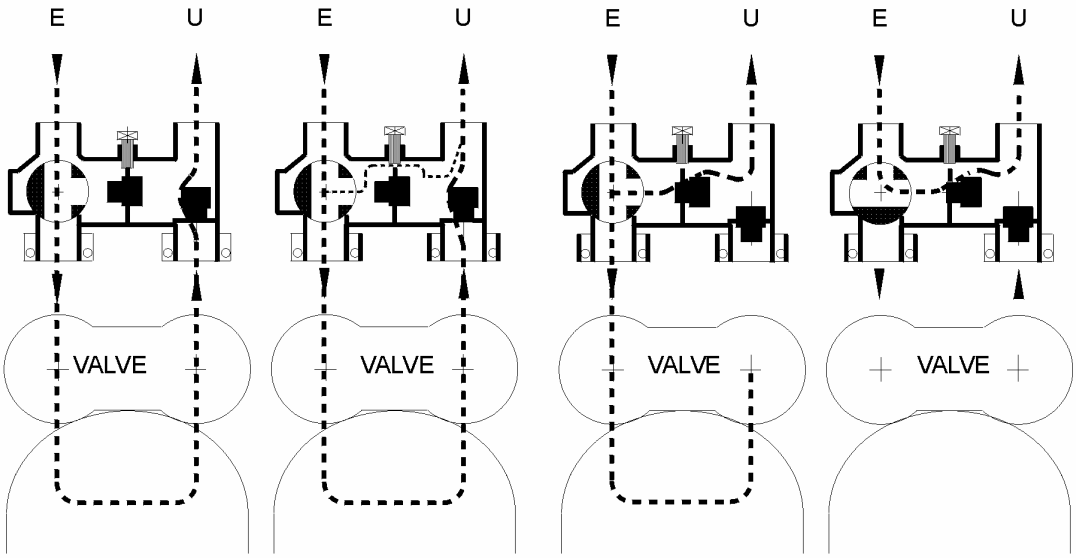

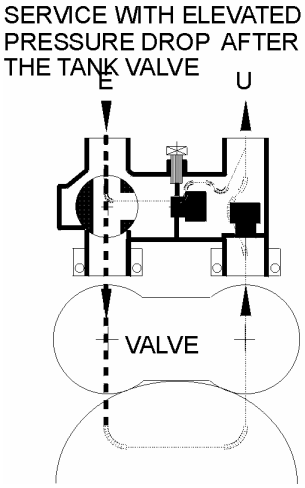

BY-PASS FOR FILTERS

DIRECT BY-PASS FOR FILTER

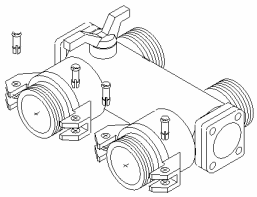

Code BV-FD

REMOTE BY-PASS FOR FILTER

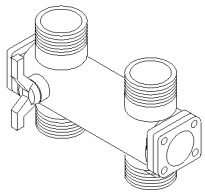

Code BV-FR

REMOTE AUTOMATIC BY-PASS COMPONENTS

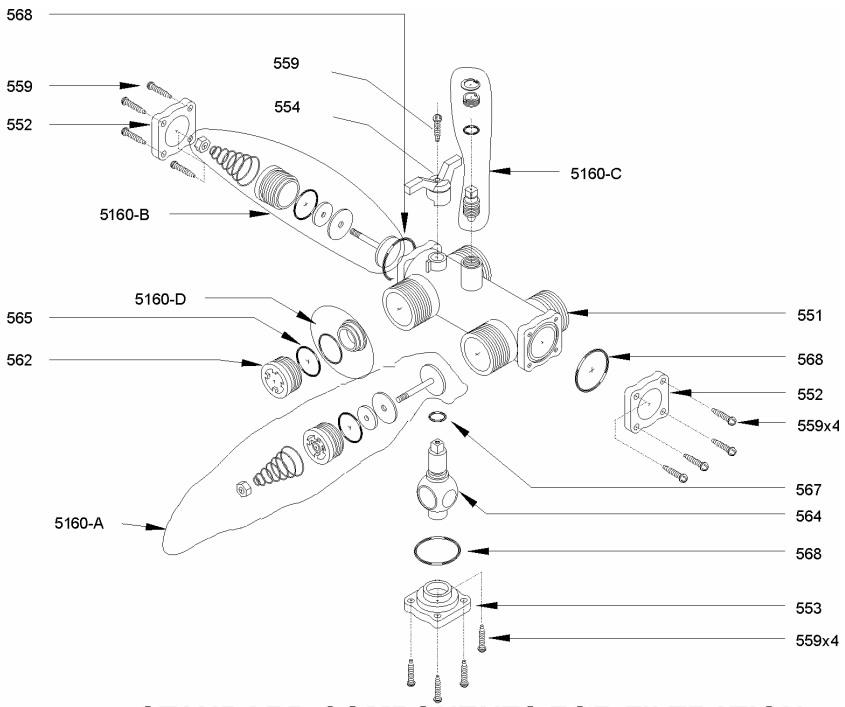

STANDARD COMPONENTS FOR FILTRATION

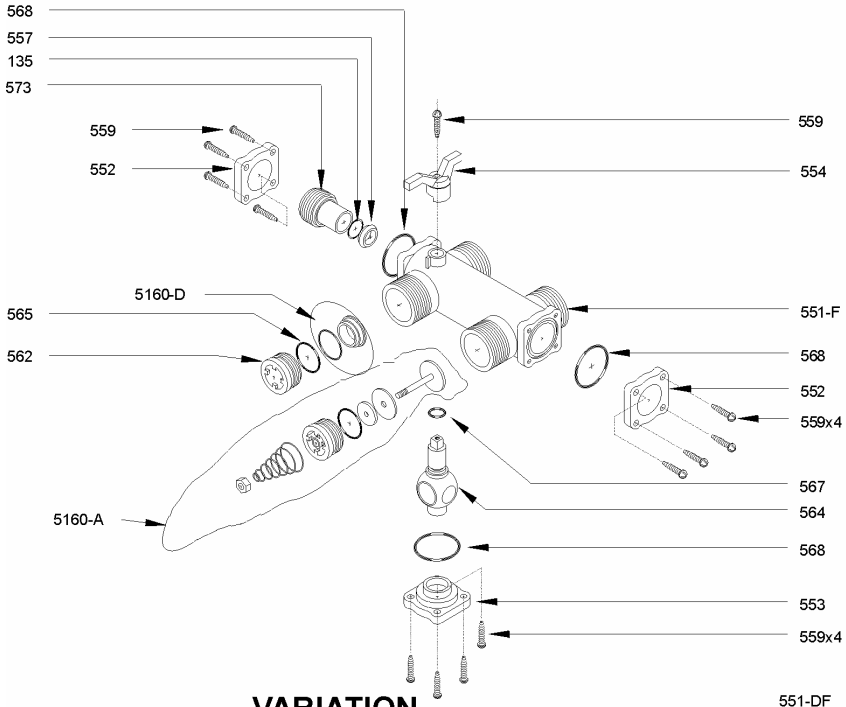

VARIATION

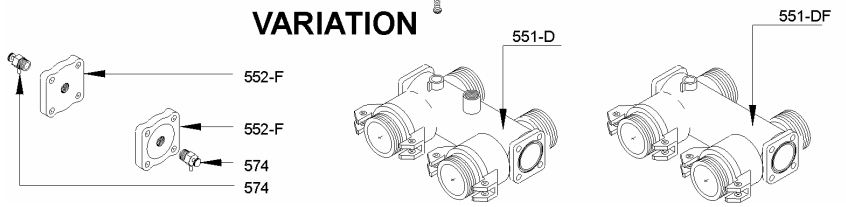

AUTOMATIC BY-PASS FUNCTIONS

Proportional automatic by-pass functions consist in performances that facilitate system service with the following functions:

a) delivery of untreated water during regeneration phases;
b) partial delivery of water under use and service when withdrawals momentarily are higher than normal; Example: a momentary increase in water consumption creates a drop in pressure after the softening tank. The drop in water pressure as it comes out of the softener causes the automatic by-pass valve to open partially, making up for the increased demand.
c) the by-pass has a mixer which, regulated to system functioning, obtains a residual hardness value in treated water in conformity with norms.
d) in the event the system is equipped with a chlorine producer, it is advised to use a BVRPOD by-pass with incoming and outgoing withdrawal, so as to perform the checks set out in DPR 443.
e) the by-pass makes it possible to exclude the valve or the entire system without interrupting water delivery.

CHLORINE PRODUCER COMPONENTS

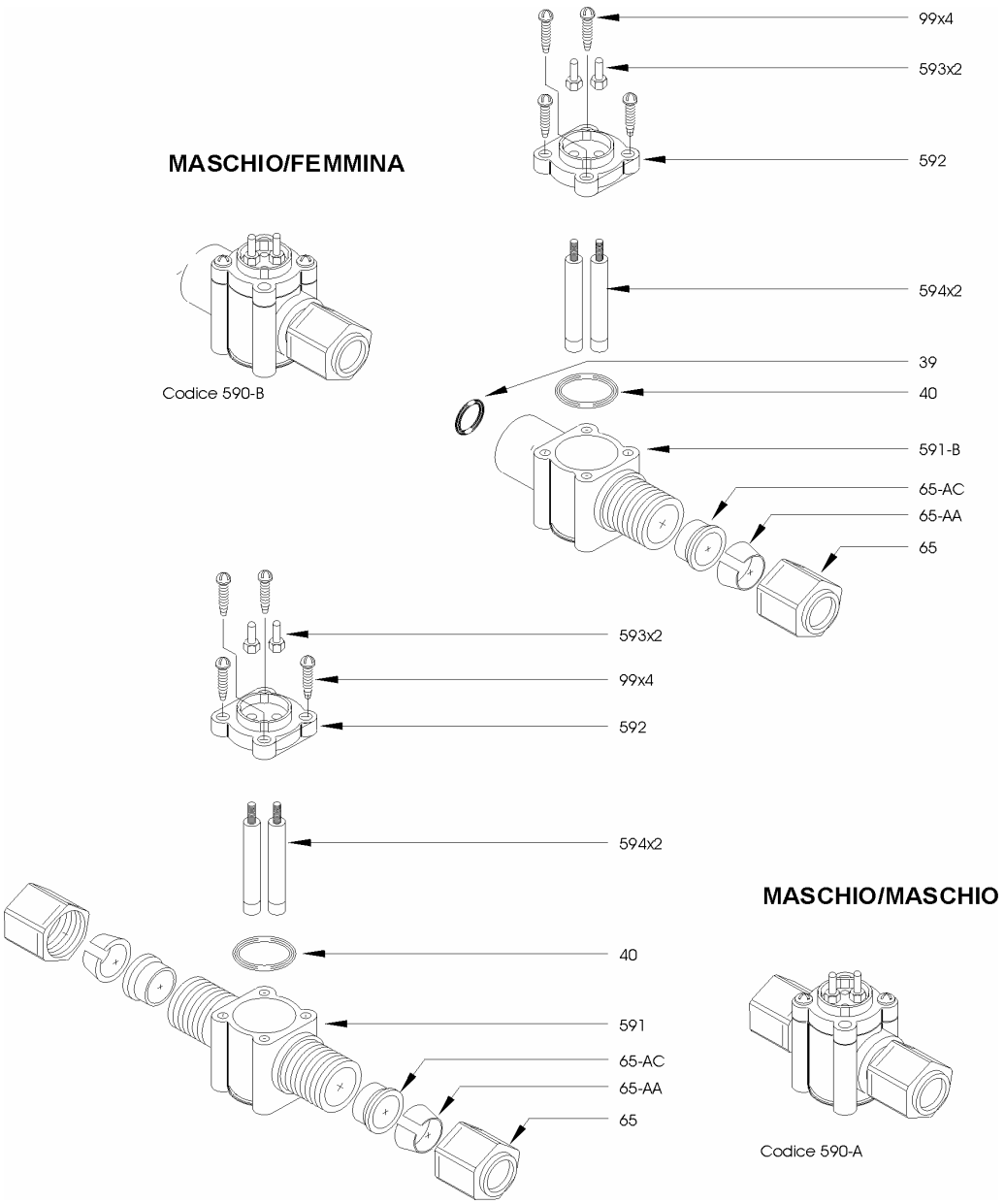

CHLORINE PRODUCER FUNCTIONS

The chlorine producer is characterised by the possibility to automatically sterilise resin with each regeneration. For this function, of course, the valve must be equipped with the appropriate "cloro" electronic timer. This controller feeds electrically, during the phase of regeneration 2C, the cell electrolytic, producing so for the duration of the phase chlorine or is mixtures. The duration of the phase 2C rule so the quantity of chlorine that is necessary for the sterilisation of the resins.

TIPS AND SUGGESTIONS

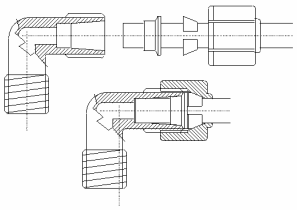

In connecting tubes and joints, using 1/8" ø 9.7 mm rigid or flexible tubes, respect tube size. Tubes of smaller dimensions can not guarantee retaining quality to pressure or pressure loss. Tubes of larger dimensions can force the housing and compromise the mounting of blocking rings and retaining quality as well.

In performing interventions on existing connections, always use new retaining rings, cod. 65-AC 65-AA. In assembling, take care that the tube end fully enters the housing to guarantee the best grip.

In the case of flexible tubes, screw on the nut tightly using only one's hands and then, if necessary, a wrench. In using rigid tubes, use a wrench.

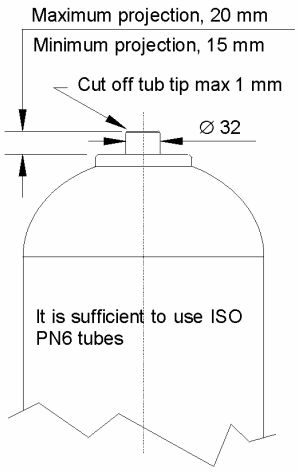

Disassembly and reassembly of self-threading screws

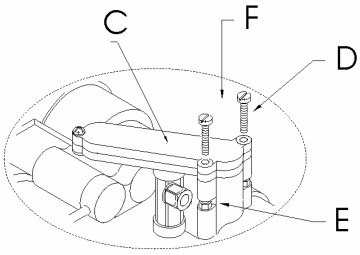

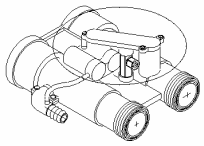

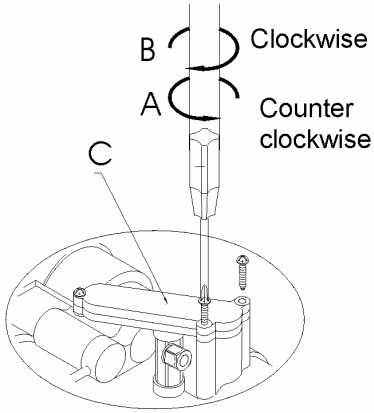

PRECAUTIONS IN DISASSEMBLING "C" COLLECTOR

In disassembling the "C" collector, unscrew the screws slowly to avoid gripping between materials and screws.
Before remounting, carefully clean the hole and screws. Insert the screw in the hole and by hand, slowly turn it in direction "A" until reaching the beginning of the thread, then turn the screw in direction "B," still by hand, without forcing it.
Using a screwdriver, slowly screw in direction "B" until tight; do not force. Always perform these operations using normal screwdrivers; do not use automatic screwdrivers.

MODIFICATION TO PERFORM IN CASE OF DAMAGE TO THREADED HOUSING OF "F" SELF-THREADING SCREWS

If during disassembly and reassembly of the "C" collector, the threads of the "F" screw housing, make a hole as indicated in "E," using a flat or squared large-grain file, 3 or 4 mm thick.
Insert a 3M nut in this hole and replace the "F" screws with M3 "D" screws of the proper length (minimum 15 mm).

KIT RICAMBI

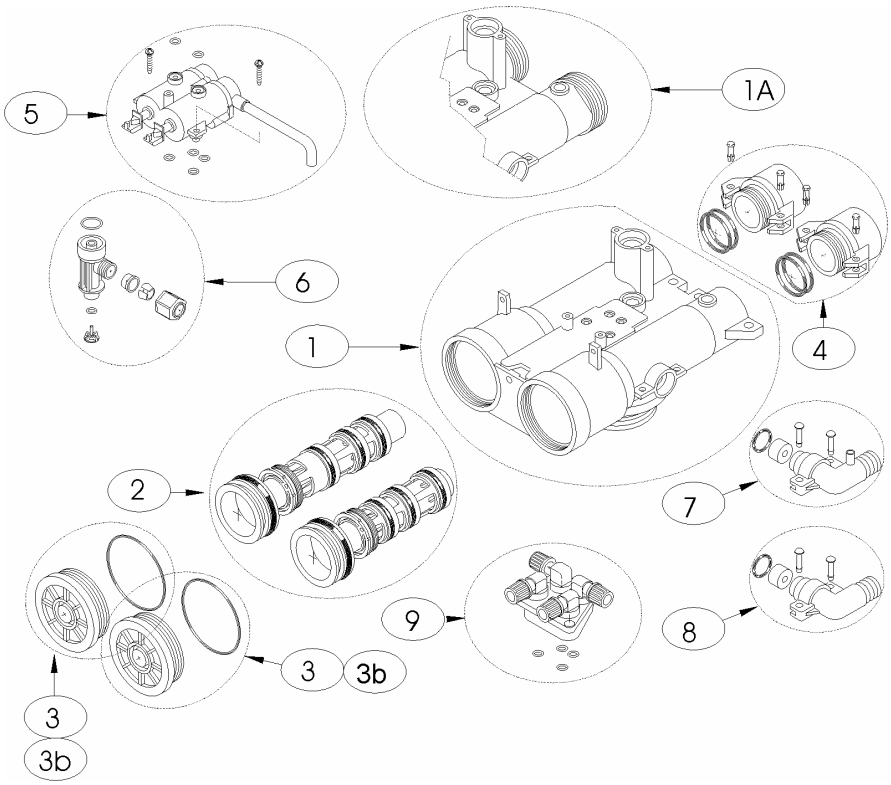

RIF .	CODE	DESCRIPTION
1	2256-K01	Standard Body Valve
	2256-K02	Volumeriic standard Body Valve
1a	2256-K03	External threads Standard Body Valve
	2256-K04	External Threads Volumeric Body Valve
2	2230	V132/240/230 Valve Piston Service Kit
3	1916-B	Piston cover
3b	1916	Piston cover with 1/8” threaded Hole
4	2265-A	Conn. E/U ¾” female threaded
	2265-B	Conn. E/U 1” female threaded
	2265-C	Conn. E/U 1 1/4”” female threaded
	2265-K	Conn. E/U 1 1/2”” female threaded
	2265-D	Conn.E/U O iso 32 female weld-on
	2265-E	Conn.E/U ¾” npt female threaded
	2265-F	Conn. E/U 1”npt female threaded
	2265-G	Conn. E/U 1” ¼ NPT female threaded
	2265-H	Conn. E/U 1” ½ male threaded
	2265-I	Conn. E/U 2” male threaded
5	2250	Twin pilot assembly for V132/240/230
6	2231-M	Brown injector
	2231-B	Elue injector
	2231-R	Red injector
	2231-N	Black injector
	2231-G	Grey injector
7	2249	Drain manfold for valve V132
8	2249-C	Closed drain manifold for valve V132
9	2252	V132/240/230 motive assembly connection

ACCESSORIES AND SPARE PARTS

	Code	Description
5	-590-A	Chlorine producer O 3/8” m/m
6	-590-B	Chlorine producer 3/8” f/m
7	-494-B	PVC Connection kit 2”x1” ¼
8	-494-C	PVC Connection kit 2”x iso 40
9	-494-F	Brass Connection Kit 2”x1” ½
10	-494-S	Kit raccordo pvc 2” gas 1” ¼ npt
11	-494-J	1” ½ gas 1” npt PVC Connection kit (for By-Pass)
12	-2222	Complete turbine body
13	-2296	1” ½ Turbine water meter
13	-2163	Conductivity sensor
15	-2162-A	Anti-corrosion retaining valve black (NAOH)
16	-2162-K1	Antiacid retaining valve red (HCl)
17	-2216	Overflowsafety valve (injector)
18	-2161	Pin regulator
19	-2238	V132 internal maintenance kit

INTERVENTIONS OF ORDINARY MAINTENANCE

drawback	cause	corrective action
leakage from drain during the service	leakage from the pilot	1) - to close water in entrance 2) - to close water in exit. 3) - to detach the tube of connection between the pilot and the drain collector . 4) - to remove the three screws that keep down the collector code 022 page. 14. To remove the two O-R 058 page. 14 and to replace them with two diskettes in soft rubber, thickness around 2mm. Or closing the passage with a thin sheet of plastic. 5) - to reassemble the collector 022, tightening the three screws taking care not to force. 6) - to reopen the inlet and the outlet of the water. Completed the procedure, if the leakage to drain has disappeared, the drawback is due to the pilot. In this case it's necessary a substitution. If the leakage persists, the cause could be owed to a leakage of the chambers of the main cylinders. To identify the defective chamber, to proceed as to the 4 point , to close only one of the two O-R 058 beginning from the left one. the same operation will be effected, eventually, also for the right chamber. The indication of what chamber is defective is the disappearance of the leakage, in relationship to the closed side of the pilot. To eliminate the defect, it is necessary to take a part the defective chamber, proceeding as below: a) to -close water inlet and outlet b) to –unscrew the cap of the defective chamber using the special tool or seeger pliers. The maintenance kit contains the right tools for the interventions of maintenance. c) - to remove the stem of the pilot of the side related to the chamber. d) - to extract the piston with a pliers, take out the inside pivot. e) -to -verify that there are not scratches or other damages on the stem of the piston. f) -if evident defects are not found on the piston, to unscrew the blockage ferrule of the spacer package , and to verify the state of the O-R 043-044-048 pag.14. If there isn't damage, it's advisable to replace all the gaskets O-R, verifying carefully the state of all. In the case to proceed is necessary to the complete removal of the spacer package, take care at the moment of the reassembly, to check the exact position page. 14.
	Leakage from external command pilot	Also this may be detected through a simple test: 1) Disconnect, in service position, pressure connectors 2 and 4 alternatively. 2) In case some water should leak from one of the pressure connectors from the pilot body, it means that the related pilot has some leaks and must be replaced. If the leakage is not due to the pilots, its cause has to be ascribed to a possible leakage of valve piston.
	leakage of her valve through the system of the pistons	In the case the leakage is found to originate only from the collector of draining, it is possible to determine easily in what chamber / piston there is the leakage. 7) -if the water of leakage to drain is hard water, it is due probably to the O-R of the ferrule 012 (043-044-048), inlet side, page. 14. Phase service pag.6. 8) - if the water of leakage to drain it results soft water, to replace the third O-R after the ferrule, page. 6 phase service. To effect this intervention, to proceed as suitable to the point 6 paragraphs "a,b,c,d,e,f."